ASSEMBLY INSTRUCTIONS

For your Pilgrim Hearth Wares Product

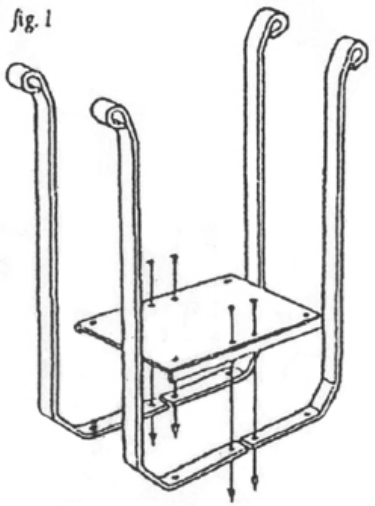

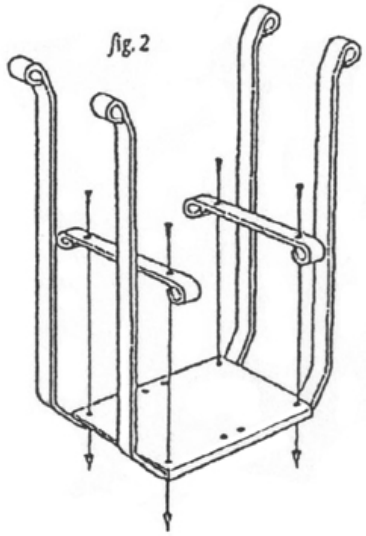

STEP 1
Using tall upright, align hole with hole in bottom plate. Using the shorter screw, place base over upright leg, then loosely attach screw into center hole of base. Repeat for remaining 3 attachments. (Fig 1)

STEP 2
Place wood holder foot across end of base plate and align holes. Insert longer screw into hole closest to upright bar. Loosely attach. Repeat for remaining 3 attachments (Fig 2)

STEP 3
Tighten all screws.

Wood Cradles

PILGRIM HOME AND HEARTH

P/N 918

ASSEMBLY INSTRUCTIONS

For your Pilgrim Hearth Wares Product

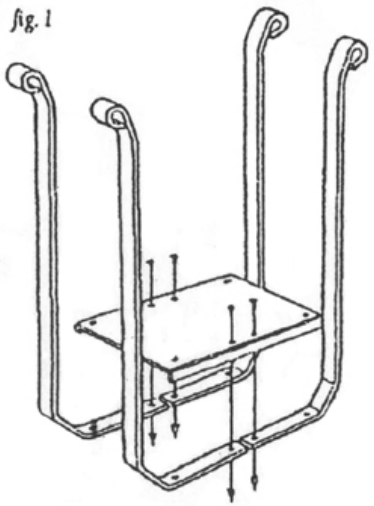

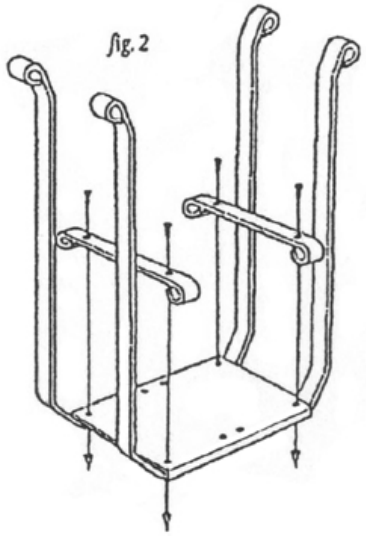

STEP 1
Using tall upright, align hole with hole in bottom plate. Using the shorter screw, place base over upright leg, then loosely attach screw into center hole of base. Repeat for remaining 3 attachments. (Fig 1)

STEP 2
Place wood holder foot across end of base plate and align holes. Insert longer screw into hole closest to upright bar. Loosely attach. Repeat for remaining 3 attachments (Fig 2)

STEP 3
Tighten all screws.

Wood Cradles

PILGRIM HOME AND HEARTH

P/N 918